Playaround
Wenn Träume Spielen Lernen

4211

Information about the product

Dimensions	352 x 352 cm
Safety zone	594 x 594 cm
Safety zone area	18,5 m²
Overall height	-
Free fall height	90 cm
Amount of users	4
Product complies with EN 1176-1:2017-12	Tak
Availability of spare parts	Tak
Age range	3-12

According to EN 1176-1:2017-12 norm, the product requires applying a safety surface according to the product's free fall height.

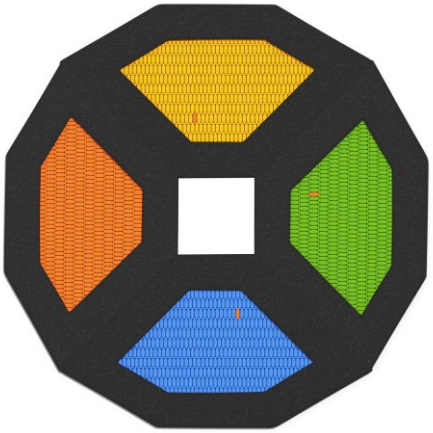

Functions

Jumping

Socializing

Let's Buglo

Playaround
Wenn Träume Spielen Lernen

4211

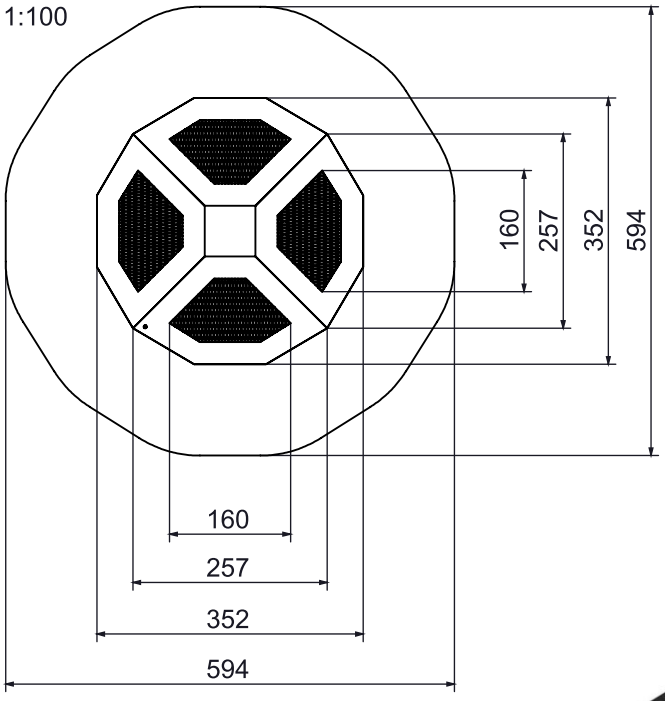

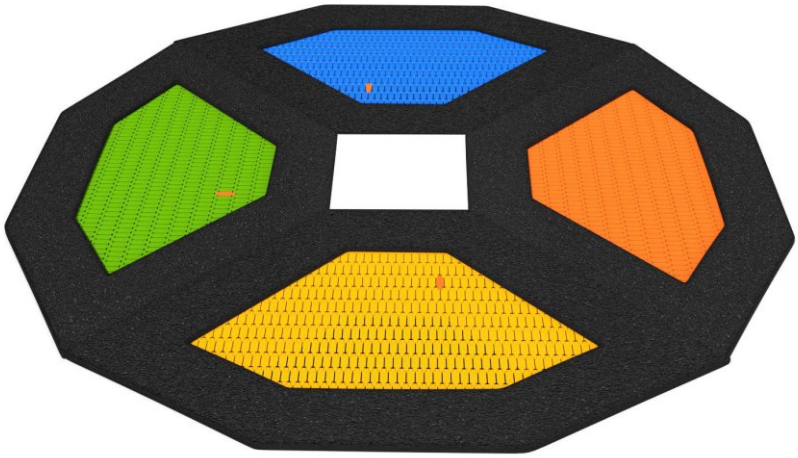

Materials

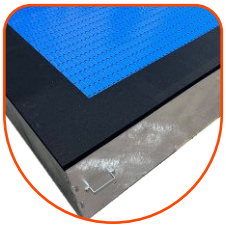

Solid welded construction made of 3 mm metal sheet, hot-dip galvanised.

Black SBR rubber surface, 30 cm wide, crush-resistant, cut from a 30 mm thick sheet.

Anti-slip jumping mat, abrasion-resistant. Spacing between slats ≈ 3mm.

Anti-slip trampoline slats made of injection-moulded polyamide.