Playaround
Wenn Träume Spielen Lernen

00802

SMART

SLIDING

SOCIALIZING

CLIMBING

SENSORIAL INTEGRATION

SWINGING

INFORMATION ABOUT THE PRODUCT

Dimensions	362 x 467 cm
Safety zone	839 x 604 cm
Safety zone area	35,3 m²
Overall height	318 cm
Free fall height	120 cm
Amount of users	6
Product complies with EN 1176-1:2017-12	YES
Availability of spare parts	YES
Age range	3-14

According to EN 1176-1:2017-12 norm, the product requires applying a safety surface according to the product's free fall height.

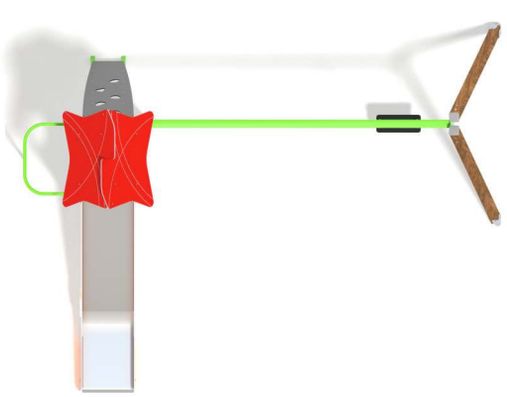

Playaround
Wenn Träume Spielen Lernen

00802

SMART

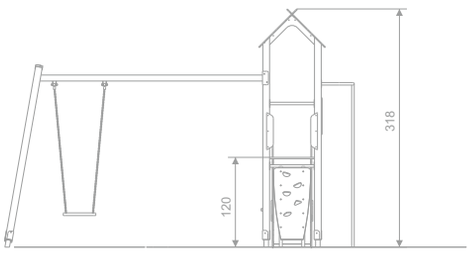

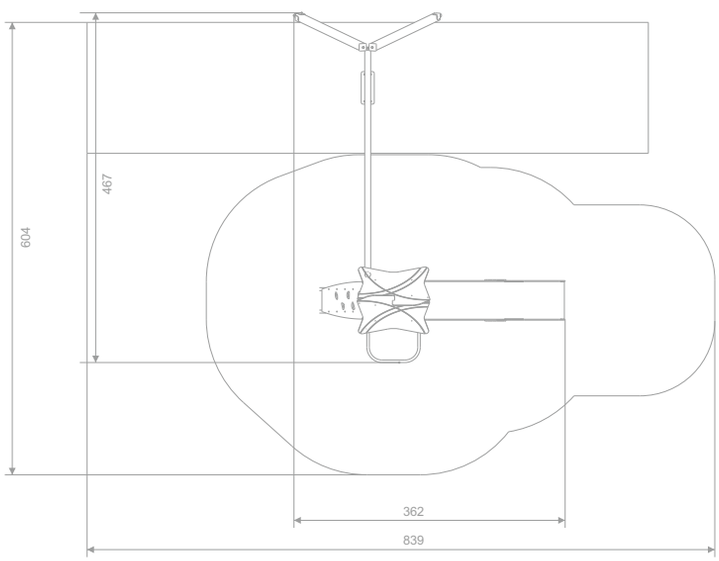

SCALE 1:100

MATERIALS:
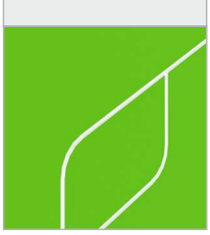
PLATES OF THE WALLS MADE OF 12 MM HDPE IN THE HIGHEST QUALITY	ANTI-SLIP ANTHRACITE 10MM HPL PLATFORM PLATE WITH A VERY HIGH RESISTANCE TO WEATHER CONDITIONS AND ATTRITION.	SOLID CONSTRUCTION MADE OF WOOD, 90x90 MM	THE SEATS ARE MADE WITH AN ALUMINUM CONSTRUCTION COVERED WITH A SOFT EPDM RUBBER	SAFE PIPE PLUGS MADE OF INJECTION MOLDED POLYAMID